Mock Test - 3

1	**3**	21	**2**	41	**2**	61	**2**	81	**3**	101	**4**	121	**2**	141	**2**	161	**3**
2	**2**	22	**4**	42	**2**	62	**4**	82	**1**	102	**2**	122	**1**	142	**3**	162	**4**
3	**2**	23	**1**	43	**2**	63	**3**	83	**1**	103	**1**	123	**2**	143	**1**	163	**3**
4	**4**	24	**3**	44	**2**	64	**4**	84	**4**	104	**3**	124	**1**	144	**1**	164	**4**
5	**1**	25	**1**	45	**2**	65	**1**	85	**1**	105	**1**	125	**4**	145	**4**	165	**3**
6	**1**	26	**3**	46	**3**	66	**2**	86	**1**	106	**3**	126	**4**	146	**4**	166	**1**
7	**4**	27	**4**	47	**4**	67	**4**	87	**2**	107	**2**	127	**2**	147	**1**	167	**4**
8	**1**	28	**2**	48	**4**	68	**3**	88	**3**	108	**3**	128	**2**	148	**3**	168	**4**
9	**1**	29	**1**	49	**4**	69	**1**	89	**4**	109	**2**	129	**2**	149	**2**	169	**4**
10	**1**	30	**1**	50	**1**	70	**2**	90	**3**	110	**4**	130	**1**	150	**1**	170	**1**
11	**3**	31	**1**	51	**1**	71	**1**	91	**4**	111	**3**	131	**1**	151	**3**	171	**1**
12	**1**	32	**3**	52	**4**	72	**2**	92	**4**	112	**1**	132	**3**	152	**1**	172	**1**
13	**2**	33	**4**	53	**2**	73	**4**	93	**4**	113	**4**	133	**3**	153	**3**	173	**3**
14	**3**	34	**1**	54	**2**	74	**4**	94	**4**	114	**1**	134	**3**	154	**2**	174	**2**
15	**3**	35	**3**	55	**1**	75	**4**	95	**3**	115	**3**	135	**3**	155	**4**	175	**2**
16	**2**	36	**2**	56	**1**	76	**4**	96	**4**	116	**3**	136	**4**	156	**3**	176	**1**
17	**3**	37	**2**	57	**4**	77	**4**	97	**4**	117	**2**	137	**4**	157	**3**	177	**1**
18	**4**	38	**2**	58	**3**	78	**3**	98	**3**	118	**4**	138	**4**	158	**3**	178	**1**
19	**2**	39	**3**	59	**2**	79	**2**	99	**4**	119	**3**	139	**3**	159	**4**	179	**2**
20	**4**	40	**2**	60	**3**	80	**4**	100	**2**	120	**3**	140	**3**	160	**4**	180	**2**

PHYSICS

1. Previously, if V_1 and V_2 are the potentials of inner and outer shells due to won charge respectively, then

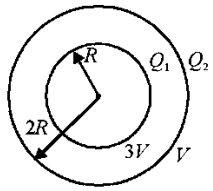

$V_1 + V_2 = 3V$

\ $V_1 + V = 3V$ or $V_1 = 2V$

When outer shell is earthed, its potential becomes zero, and so potential of inner shell becomes

$V_1' = 2V + 0 = 2V$

2. $W_{ABD} = W_{AB} + W_{BD}$

$= 0 + 6 \times 10^4 \times 4 \times 10^{-3}$

$= 240$ J.

Now, $Q = \Delta U + W$

or $500 + 150 = \Delta U + 240$

\ $\Delta U = 410$ J.

3. In CGS system,

$d = 4 \dfrac{g}{cm^3}$

The unit of mass is 100 g and unit of length is 10 cm, so

$$\text{density} = \frac{4\left(\frac{100g}{100}\right)}{\left(\frac{10}{10}cm\right)^3}$$

$$= \frac{\left(\frac{4}{100}\right)}{\left(\frac{1}{10}\right)^3}\frac{(100g)}{(10cm)^3}$$

$$= \frac{4}{100} \times (10)^3 . \frac{100g}{(10cm)^3}$$

$= 40$ unit

4. $g = \dfrac{GM}{R}$ and $g' = \dfrac{GM}{(R+h)^2}$

Þ $\dfrac{g'}{g} = \left(\dfrac{R}{R+h}\right)^2$

\ $g' = g\left(\dfrac{R}{R+h}\right)^2$

Þ $\dfrac{g}{2} = g\left(\dfrac{R}{R+h}\right)^2$ Þ $\dfrac{1}{\sqrt{2}} = \dfrac{R}{R+h}$

Þ $R + h = \sqrt{2}R$ or $h = (\sqrt{2} - 1)R$

5. Given, $h = 60$m, $g = 10$ ms^{-2},

Rate of flow of water = 15 kg/s

\ Power of the falling water

$= 15$ kgs$^{-1} \times 10$ ms$^{-2} \times 60$ m $= 900$ watt.

Loss in energy due to friction

$= 9000 \times \dfrac{10}{100} = 900$ watt.

\ Power generated by the turbine

$= (9000 - 900)$ watt $= 8100$ watt $= 8.1$ kW

6. $N_1 = 25 \sin\theta$

\ $f_1 = \mu N_1 = \dfrac{2}{5} \times 25 \times \dfrac{3}{5} = 6$N.

$f_2 = \mu N_2 = \dfrac{2}{5} mg = \dfrac{2}{5} \times 1 \times 10$

$= 4$N.

Now from Newton's second law

$25 \cos\theta - (f_1 + f_2) = ma$

or $25 \times \dfrac{4}{5} - (6 + 4) = 1\,a$

\ $a = 10$ m/s^2.

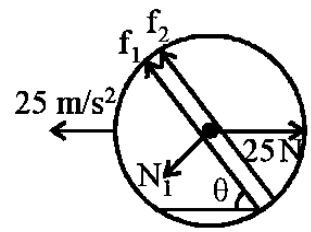

7. $\dfrac{1}{2}mv^2 = \dfrac{hc}{\lambda} - W_0$ or $\dfrac{hc}{\lambda} = \dfrac{1}{2}mv^2 + W_0$ and

$\dfrac{1}{2}mv_1^2 = \dfrac{hc}{(3\lambda/4)} - W_0$

$= \dfrac{4}{3}\left(\dfrac{1}{2}mv^2 + W_0\right) - W_0$

So, v_1 is greater than $v\left(\dfrac{4}{3}\right)^{1/2}$.

8. Current through each bulb is same because these are connected in series.

since $\left(R = \dfrac{V^2}{P}\right)$, resistance of 40 W bulb is more, hence greater heat is produced in the 40 W bulb, it glows brightest

$H = I^2R\,t$

9. M.I. of disc about tangent in a plane $= \dfrac{5}{4}mR^2 = I$

\ $mR^2 = \dfrac{4}{5}I$ ...(i)

M.I. of disc about tangent $\perp$ to plane $I' = \dfrac{3}{2}mR^2$

Substituting the value of mR^2 from equation (i) we get

$I' = \dfrac{3}{2}\left(\dfrac{4}{5}I\right) = \dfrac{6}{5}I$

10. Process AB is isobasic and BC is isothermal, CD isochoric and DA isothermic compression.

11. Electric field lines at each point of the ball must crosses normally.

12. $E = \dfrac{hc}{\lambda}$ Þ $\lambda = \dfrac{hc}{E} = \dfrac{6.62 \times 10^{-34} \times 3 \times 10^8}{12.5 \times 1.6 \times 10^{-19}}$

$= 993$ A°

$\dfrac{1}{\lambda} = R\left(\dfrac{1}{n_1^2} - \dfrac{1}{n_2^2}\right)$

(where Rydberg constant, $R = 1.097 \times 10^7$)

or, $\frac{1}{993 \times 10^{-10}} = 1.097 \times 10^{7} \left(\frac{1}{1^2} - \frac{1}{n_2^2}\right)$

Solving we get $n_2 = 3$

Spectral lines

Total number of spectral lines = 3

Two lines in Lyman series for $n_1 = 1$, $n_2 = 2$ and $n_1 = 1$, $n_2 = 3$ and one is Balmer series for $n_1 = 2$, $n_2 = 3$

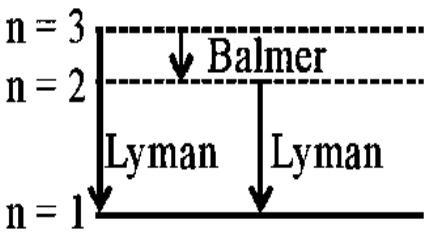

13. Boat covers distance of 16 km in a still water in 2 hours.

i.e., $v_B = \frac{16}{2}$ km/hr

Now velocity of water Þ $v_W = 4$km/hr

Time taken for going upstream

$t_1 = \frac{8}{v_B - v_W} = \frac{8}{8 - 4} = 2$hr

(As water current oppose the motion of boat)

Time taken for going down stream

$t_2 = \frac{8}{v_B + v_W} = \frac{8}{8 + 4} = \frac{8}{12}$ hr

(As water current helps the motion of boat)

\ Total time = $t_1 + t_2 = \left(2 + \frac{8}{12}\right)$hr or 2 hr 40 min.

14. Current in circuit = $\frac{(3 - 1)V}{200W} = \frac{2}{200} = 0.01$ A.

15. Given $t = d^{a/2}, r^{b/2}, s^{c/2}$. Substituting dimensions, we have

$(T) = (ML^{-3})^{a/2}(L)^{b/2}(MT^{-2})^{c/2}$

$= M^{(a+c)/2}. L^{(-3a/2 + b/2)} T^{-c}$

Equating powers of L, we have,

$-\frac{3}{2}a + \frac{b}{2} = 0.$ Given a = 1

\ $-\frac{3}{2} + \frac{b}{2} = 0$ or $b = 3$

16. Distance covered by lift is given by

$y = t^2$

\ Acceleration of lift upwards

$= \frac{d^2y}{dt^2} = \frac{d}{dt}(2t) = 2$ m/s^2 $= \frac{g}{5}$

Now, $T = 2\pi\sqrt{\frac{l}{g}}$

$T' = 2\pi\sqrt{\frac{l}{g + \frac{g}{5}}} = 2p\sqrt{\frac{l}{\frac{6}{5}g}} = \sqrt{\frac{5}{6}}T.$

17. Angular limit of resolution of eye, $\theta = \frac{l}{d}$, where, d is diameter of eye lens.

Also, if y is the minimum separation between two objects at distance D from eye then

$\theta = \frac{y}{D}$

Þ $\frac{y}{D} = \frac{l}{d}$ Þ $y = \frac{lD}{d}$ ...(1)

Here, wavelength $\lambda = 5000$ Å $= 5 \times 10^{-7}$ m

D = 50 m

Diameter of eye lens = 2 mm = 2×10^{-3} m

From eq. (1), minimum separation is

$y = \frac{5 \times 10^{-7} \times 50}{2 \times 10^{-3}} = 12.5 \times 10^{-3}$ m

18. The equivalent circuit is as shown in figure.

The resistance of arm AOD (=R + R) is in parallel to the resistance R of arm AD.

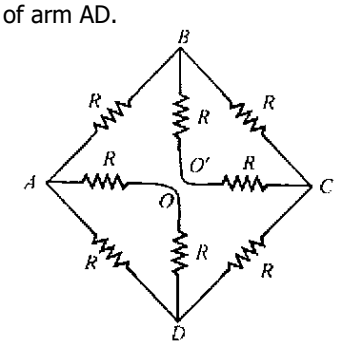

Their effective resistance $R_1 = \frac{2R \times R}{2R \times R} = \frac{2}{3}R$

The resistance of arms AB, BC and CD is

$R_2 = R + \frac{2}{3}R + R = \frac{8}{3}R$

The resistance R_1 and R_2 are in parallel. The effective resistance between A and D is

$R_3 = \frac{R_1 \times R_2}{R_1 + R_2} = \frac{\frac{2}{3}R \times \frac{8}{3}R}{\frac{2}{3}R + \frac{8}{3}R} = \frac{8}{15}R.$

19. Both the charges are identical and placed symmetrically about ABCD. The flux crossing ABCD due to each charge is $\frac{1}{6}\left(\frac{q}{\varepsilon_0}\right)$ but in opposite directions. Therefore the resultant is zero.

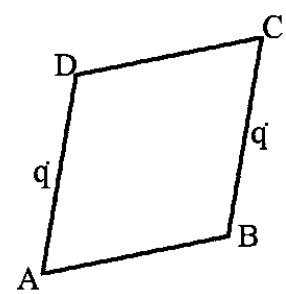

20. C_v for hydrogen = $\frac{5}{2}R$

C_v for helium = $\frac{3R}{2}$

C_v for water vapour = $\frac{6R}{2} = 3R$

\ $(C_v)_{mix} = \frac{4 \times \frac{5}{2}R + 2 \times \frac{3}{2}R + 1 \times 3R}{4 + 2 + 1} = \frac{16}{7}R$

\ $C_p = C_v + R$

$C_p = \frac{16}{7}R + R$ or $C_p = \frac{23}{7}R$

21. The effective circuit is shown in the figure

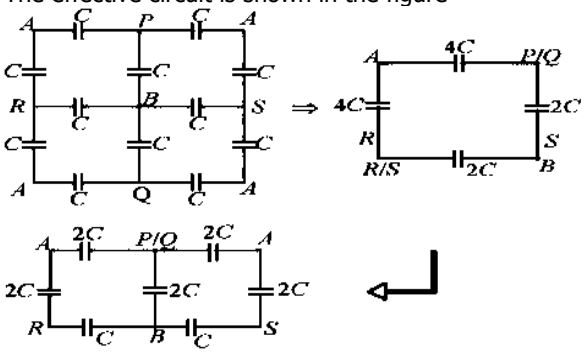

Now $C_{AB} = 2 \times \frac{4C \times 2C}{4C + 2C} = \frac{8C}{3}$

22. Work done by tension + Work done by force (applied) + Work done by gravitational force = change in kinetic energy

Work done by tension is zero

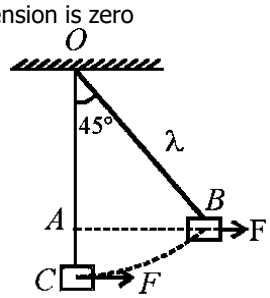

$\Rightarrow 0 + F \times AB - Mg \times AC = 0$

$\Rightarrow F = Mg\left(\frac{AC}{AB}\right) = Mg\left(\frac{1 - \frac{1}{\sqrt{2}}}{\frac{1}{\sqrt{2}}}\right)$

[$\because AB = l \sin 45° = \frac{l}{\sqrt{2}}$ and

$AC = OC - OA = l - l\cos 45° = l\left(1 - \frac{1}{\sqrt{2}}\right)$

where l = length of the string.]

$\Rightarrow F = Mg(\sqrt{2} - 1)$

23. $\frac{E_s}{E_p} = \frac{n_s}{n_p}$ or $E_s = E_p \times \left(\frac{n_s}{n_p}\right)$

$\therefore E_s = 120 \times \left(\frac{200}{100}\right) = 240$ V

$\frac{I_p}{I_s} = \frac{n_s}{n_p}$ or $I_s = I_p\left(\frac{n_s}{n_p}\right) \therefore I_s = 10\left(\frac{100}{200}\right) = 5$ amp

24. Applying conservation of energy principle, we get

$\frac{1}{2}mk^2v_e^2 - \frac{GMm}{R} = -\frac{GMm}{r}$

$\Rightarrow \frac{1}{2}mk^2\frac{2GM}{R} - \frac{GMm}{R} = -\frac{GMm}{r}$

$\Rightarrow \frac{k^2}{R} - \frac{1}{R} = -\frac{1}{r} \Rightarrow \frac{1}{r} = \frac{1}{R} - \frac{k^2}{R}$

$\Rightarrow \frac{1}{r} = \frac{1}{R}(1 - k^2) \Rightarrow r = \frac{R}{1 - k^2}$

25. Water rises upto the top of capillary tube and stays there without overflowing.

26.

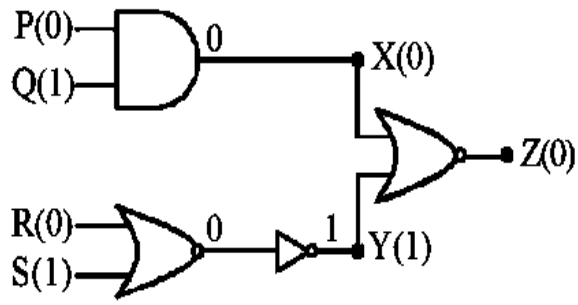

27. The self inductance of a long solenoid is given by

$L = \mu_r\mu_0 n^2 Al$

Self inductance of a long solenoid is independent of the current flowing through it.

28. It means that car which is moving on a horizontal road & the necessary centripetal force, which is provided by friction (between car & road) is not sufficient.

If μ is friction between car and road, then max seed of safely turn on horizontal road is determined from figure.

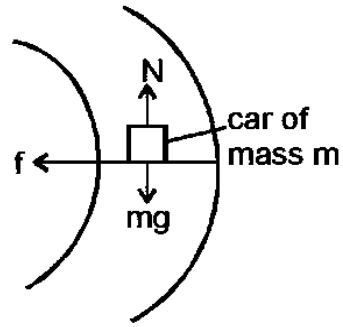

$N = mg$ ...(i)

$f = \frac{mv^2}{r}$ ...(ii)

where f is frictional force between road & car, N is the normal reaction exerted by road on the car. We know that

$f = \mu_s N = \mu_s mg$ ...(iii)

where μ_s is static friction

so from eqn (ii) & (iii) we have

$\frac{mv^2}{r} \le \mu_s mg \Rightarrow v^2 \le \mu_s rg$ or $v \le \sqrt{\mu_s rg}$

& $v_{max} = \sqrt{\mu_s rg}$

If the speed of car is greater than v_{max} at that road, then it will be thrown out from road i.e., skidding.

29. Time period of simple pendulum is given by:

$T = 2\pi\sqrt{\frac{l}{g_{eff}}}$ or, $T = \frac{k}{\sqrt{g_{eff}}}$

Now, $T_1 = \frac{k}{\sqrt{g}}$ and $T_2 = \frac{k}{\sqrt{g\left(1 - \frac{d}{R}\right)}}$

So, $\frac{T_1}{T_2} = \sqrt{1 - \frac{d}{R}} = \left(\frac{T_1}{T_2}\right)^2 = 1 - \frac{d}{R}$

$d = \left[1 - \left(\frac{T_1}{T_2}\right)^2\right]R$

30. Black board paint is quite approximately equal to black bodies.

31. Here, r = 6 cm = 6 x 10^{-2} m, N = 20, ω = 40 $rads^{-1}$
B = 2 x 10^{-2} T, R = 8Ω
Maximum emf induced, $\varepsilon = NAB\omega$
$= N(\pi r^2)B\omega$
$= 20 \times \pi \times (6 \times 10^{-2})\ 2 \times 10^{-2} \times 40 = 0.18$ V
Average value of emf induced over a full cycle
$\varepsilon_{av} = 0$
Maximum value of current in the coil.
$I = \frac{eI}{R} = \frac{0.18}{8} = 0.023$ A
Average power dissipated,
$P = \frac{eI}{2} = \frac{0.18 \times 0.023}{2} = 2.07 \times 10^{-3}$ W

32. Angle of prism A = 60°
By prism formula
$$\mu = \frac{\sin\left(\frac{A + d_m}{2}\right)}{\sin\left(\frac{A}{2}\right)}$$
$$\text{or } \sqrt{3} = \frac{\sin\left(\frac{60° + d_m}{2}\right)}{\sin\left(\frac{60°}{2}\right)}$$
$$\frac{\sqrt{3}}{2} = \sin\left(\frac{60° + d_m}{2}\right)$$
$$\sin 60° = \sin\left(\frac{60° + d_m}{2}\right)$$
$$60° = \frac{60° + d_m}{2} \Rightarrow \delta_m = 60°$$
As we know,
$\delta_m = 2\theta - A$
$$\theta = \frac{d_m + A}{2} = \frac{60° + 60°}{2} = 60°$$

33. Torque on the solenoid is given by
$\tau = MB \sin\theta$
where θ is the angle between the magnetic field and the axis of solenoid.
M = niA
$\therefore\ \tau = niA\,B \sin 30°$
$= 2000 \times 2 \times 1.5 \times 10^{-4} \times 5 \times 10^{-2} \times \frac{1}{2}$
$= 1.5 \times 10^{-2}$ N – m

34. mg = 72 N (body weight on the surface)
$$g = \frac{GM}{R^2}$$
At a height $H = \frac{R}{2}$,
$$g' = \frac{GM}{\left(R + \frac{R}{2}\right)^2} = \frac{4GM}{9R^2}$$
Body weight at height $H = \frac{R}{2}$,
$$mg' = m \times \frac{4}{9}\frac{GM}{R^2}$$
$$= m \times \frac{4}{9} \times g = \frac{4}{9} mg$$
$$= \frac{4}{9} \times 72 = 32 \text{ N}$$

35. If l is the original length of wire, then change in length of first wire, $\Delta l_1 = (l_1 - l)$
Change in length of second wire, $\Delta l_2 = (l_2 - l)$
$$\text{Now, } Y = \frac{T_1}{A} \times \frac{l}{D l_1} = \frac{T_2}{A} \times \frac{l}{D l_2}$$
$$\text{or } \frac{T_1}{D l_1} = \frac{T_2}{D l_2} \text{ or } \frac{T_1}{l_1 - l} = \frac{T_2}{l_2 - l}$$
$$\text{or } T_1 l_2 - T_1 l = T_2 l_1 - l T_2 \text{ or } l = \frac{T_2 l_1 - T_1 l_2}{T_2 - T_1}$$

36. $Q_a = \Delta U + 0 = \Delta U$
and $Q_b = \Delta U + P\Delta V$
As $Q_b > Q_a$, $\therefore$ Change in entropy is greater in case (2).

37. According to the principal of circular motion in a magnetic field
$$F_c = F_m \Rightarrow \frac{mv^2}{R} = qVB$$
$$\Rightarrow R = \frac{mv}{qB} = \frac{P}{qB} = \frac{\sqrt{2m.k}}{qB}$$
$$R_\alpha = \frac{\sqrt{2(4m)K'}}{2qB}$$
$$\frac{R}{R_a} = \sqrt{\frac{K}{K'}}$$
but $R = R_\alpha$ (given)
Thus $K = K' = 1$ MeV

38. Rate of flow of liquid $V = \frac{P}{R}$
where liquid resistance $R = \frac{8hl}{pr^4}$
For another tube liquid resistance;
$$R' = \frac{8hl}{p\left(\frac{r}{2}\right)^4} . 16 = 16R$$
For the series combination
$$V_{New} = \frac{P}{R + R'} = \frac{P}{R + 16R} = \frac{P}{17R} = \frac{V}{17}$$

39. The distance of object from mirror=$15 + \frac{33.25}{4}$ x3=39.93cm
Distance of image from mirror = $15 + \frac{25 \times 3}{4} = 33.75$ cm
Using mirror formula,
$$\frac{1}{v} + \frac{1}{u} = \frac{1}{f}$$
$$\text{or } \frac{1}{-33.93} + \frac{1}{-33.75} = \frac{1}{f}$$
$\therefore$ f = -18.3 cm

40. Rate of cooling of a body $R = \frac{Dq}{t} = \frac{Aes(T^4 - T_0^4)}{mc}$
$$\Rightarrow R \propto \frac{A}{m} \propto \frac{\text{Area}}{\text{Volume}} \quad [m = \rho \times V]$$

Þ For the same surface area. $R \mu \frac{1}{\text{Volume}}$

Q Volume of cube < Volume of sphere

Þ $R_{cube} > R_{sphere}$ i.e., cube, cools down with faster rate.

41. Let a current I be flowing in the loop ABC in the direction shown in the figure. If the length of each of the sides AB and BC be x then

$|\vec{F}| = i \times B$

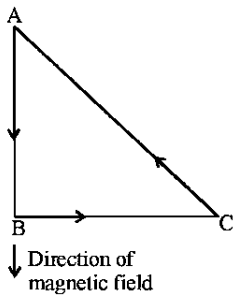

where B is the magnitude of the magnetic force.

The direction of $\vec{F}$ will be in the direction perpendicular to the plane of the paper and going into it.

By Pythagorus theorem,

$AC = \sqrt{x^2 + x^2} = \sqrt{2}x$

\ Magnitude of force on AC

$= i\sqrt{2} \times B \sin 45°$

$= i\sqrt{2} \times B \times \frac{1}{\sqrt{2}}$

$= i \times B = |\vec{F}|$

The direction of the force on AC is perpendicular to the plane of the paper and going out of it. Hence, force on AC = $-\vec{F}$

42. A nucleus is denoted by $_ZX^A$

An isotope should have same Z.

α-particle = $_2He^4$; β-particle = $_{-1}b^0$

The emission of one α particle and the emission of two β particles maintain the Z same.

Hence, for isotope formation 2β particles and one α particle are emitted.

43. Fundamental frequency of closed organ pipe

$$V_c = \frac{V}{4l_c}$$

Fundamental frequency of open organ pipe

$$V_0 = \frac{V}{2l_0}$$

Second overtone frequency of open organ pipe = $\frac{3V}{2l_0}$

From question,

$$\frac{V}{4l_c} = \frac{3V}{2l_0}$$

Þ $I_0 = 6I_c = 6 \times 20 = 120$ cm

44. If a body slides down, then the force of friction acts towards along the plane weight(mg) act vertically downwards.

45. Forward bias opposes the potential barrier and if the applied voltage is more than knee voltage it cancels the potential barrier.

CHEMISTRY

46. This is Avagadro's hypothesis.
According to this, equal volume of all gases contain equal no. of molecules under similar condition of temperature and pressure.

47. Q = m x L
where, L = latent heat of vapourisation of water
= 2260 kJ/kg
= 2260×10^3 J/kg
$Q = 70 \times 10^{-3} \times 2260 \times 10^3 = 1,58,200$ Joule

48. Nil

49. Oxidation state of Ti in the given compounds as follows:

TiO	-	+2
TiO_2	-	+4
K_2TiF_6	-	+4
K_2TiO_4	-	+6

The oxidation states exhibited by Ti is +2, +3, +4. So K_2TiO_4 does not exist.

50. $(CH_3)_2C = CH_2 \xrightarrow{HBr} (CH_3)_2CHCH_2Br$
Isobutylene Isobutyl bromide
Note that, here HBr is added in anti-Markownikoff's manner, so reaction should take place in presence of peroxide. Hydroquinone and diphenylamine are not free-radical producing substances but scavengers.

51. The sequence of bases in mRNA are read in a serial order in groups of three at a time. Each triplet of nucleotides (having a specific sequence of bases) is known as codon. Each codon specifies one amino acid. Further since, there are four bases, therefore, $4^3 = 64$ triplets or codons are possible.

52. In FeS_2, Fe^{2+} is converting into Fe^{3+} and sulphur is changing from -1 oxidation state to +4 oxidation state. There are two S^- and one Fe^{2+} in FeS_2. Thus total no. of electrons lost in the given reaction are 11.

53. $2Al + \frac{3}{2}O_2 \rightarrow Al_2O_3, \Delta H = -1596$ kJ ...(i)

$2Cr + \frac{3}{2}O_2 \rightarrow Cr_2O_3, \Delta H = -1134$ kJ ...(ii)

By (i) – (ii)

$2Al + Cr_2O_3 \rightarrow 2Cr + Al_2O_3, \Delta H = -462$ kJ.

54. It is an example of concentration cell, E_{cell} cannot be zero since $[H^+]$ are different (HCl is strong and CH_3COOH weak acid).

55. CaO is basic as if form strong base $Ca(OH)_2$ on reaction with water.

$CaO + H_2O \rightarrow Ca(OH)_2$

CO_2 is acidic as it dissolve in water forming unstable carbonic acid.

$H_2O + CO_2 \rightarrow H_2CO_3$

Silica (SiO_2) is insoluble in water and acts as a very weak acid.

SnO_2 is amphoteric as it reacts with both acid and base.

$SnO_2 + 2H_2SO_4 \rightarrow Sn(SO_4)_2 + 2H_2O$

$SnO_2 + 2KOH \rightarrow K_2SnO_3 + H_2O$

56. A) Sulphuric acid (iv) Contact process
B) Steel (ii) Bessemer's process
C) Sodium hydroxide (iii) Leblanc process
D) Ammonia (i) Haber's process

57. Nil

58. Nil

59. Forward reaction is favoured by removal of products.

60. Reaction rate = k $[A]^2[B]$
Now increase conc. of A by three times and conc. of B by two times. Then new rate
$R_2 = k\,[3A]^2[2B]$
$$\frac{R_1}{R_2} = \frac{k[A]^2[B]}{k[3A]^2[2B]} = \frac{1}{3^2} \times \frac{1}{2} = \frac{1}{18}$$
$R_2 = 18 \times R_1$
Hence rate increases by 18 times.

61. Since the leaving group breaks away as a base, it is easier to displace weaker bases as compared to stronger bases. Thus less basic the substituent, the more easily it is displaced.
Since the basic strength of the given groups is in order.
$I^- < Br^- < Cl^-$
Thus the order of halogen leaving groups is
$I^- > Br^- > Cl^-$

62. Nil

63. Electrolytic reduction of nitrobenzene in weakly acidic medium gives aniline, whereas in strongly acidic medium it gives p-hydroxyaniline.

64. $2CaOCl_2 \xrightarrow{CoCl_2} 2CaCl_2 + O_2$

65.
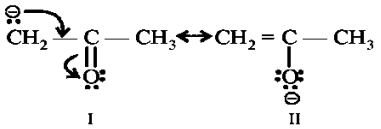

66. After every 30 minutes the amount is reduced to $\frac{1}{2}$ therefore $t_{1/2}$ is 30 minutes. In 90 minutes the amount is reduced to $\frac{1}{8}$ i.e. $\frac{1}{2^n}$. Here n = 3. True for 1st order reaction.

67.
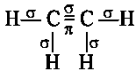

68. $(4n + 2)\pi$ electrons and planar structure are the essential conditions for aromaticity.

69. Normally $NaBH_4$ as well as $LiAlH_4$ reduce only – CHO group without effecting carbon-carbon double bond, however when it is present in conjugation with benzene ring and aldehydic group it is also reduced along with the reduction of –CHO group.
$C_6H_5CH = CH\,CHO \xrightarrow{NaBH_4} C_6H_5CH_2CH_2CH_2OH$

70. Nil

71. It is due to movement of energized electrons (KE μ T).

72. Nil

73. Nil

74. He_2 Bond order = $\frac{1}{2}$ (2-2) = 0. Hence cannot be formed.

75. Interstitial compounds of transition metal exhibit metallic conductivity.

76. The drugs which act on the central nervous system and help in reducing anxiety are called tranquilizers.

77. Colligative properties depends upon the no. of particles. Since methanol is non electrolyte hence cannot be considered.

78. Nil

79. Aryl halides are less reactive towards nucleophilic substitution because of the partial double bond character of carbon-halogen bonds. It is also partly due to repulsion between the electron cloud of the benzene ring and nucleophile.

80. Pressure exerted by the gas, $P = \frac{1}{3}\frac{mnu^2}{V}$ ...(1)
Here, u = root mean square velocity
m = mass of a molecule, n = No. of molecules of the gas
Hence (a) & (b) are clearly wrong.
Again $u^2 = \frac{3RT}{M}$ [explained from (1)]
Here, M = Molecular wt. of the gas;
Hence (c) is wrong
Further, Average K.E. = $\frac{3}{2}$ KT; Hence (D) is true.

81. As MgO is a weak base hence some energy got consumed to break MgO (s). Hence enthalpy is less than -57.33 kJ mol^{-1}.

82. Smaller the charge on anion, lesser will be its coagulating power.
\ KBr have Br^- with least charge of -1 on Br thus KBr is least effective in coagulating $Fe(OH)_3$.

83. Calcium and magnesium form complexes with EDTA.

84. Since Sc^{3+} does not contain any unpaired electron it is colourless in water.

85. ABS is acrylonitrile-butadiene-styrene rubber which is obtained by copolymerization of acrylonitrile, 1, 3-butadiene and styrene.
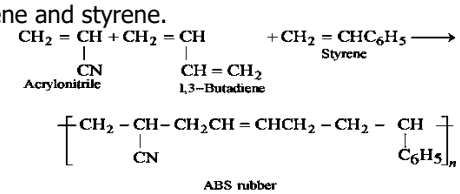

86. Cl_2 is obtained by electrolysis of (aqueous) NaCl.

87. Stability of an alkene depends upon the heat of hydrogenation of an alkene. The lower the heat of hydrogenation of an alkene higher will be stability.

Order of stability	Heat of hydrogenation (kJ/mol)
trans-2-butene	115.5
cis-2-butene	119.6 and
1-butene	126.8

88. Nil

89. We can distinguish between formic acid and acetic acid by their action on Fehling's solution. Formic acid gives a red ppt of cuprous oxide but acetic acid does not give red ppt.

90. In presence of non-protic solvent such as $CHCl_3$ or CCl_4, concentration of electrophile (Br^+) is less, hence reaction stops at the monobromo stage.